WIRING OPTION #1 - Allows fan to operate in automatic mode or manual mode (for odor control) by cycling ON/OFF switch.

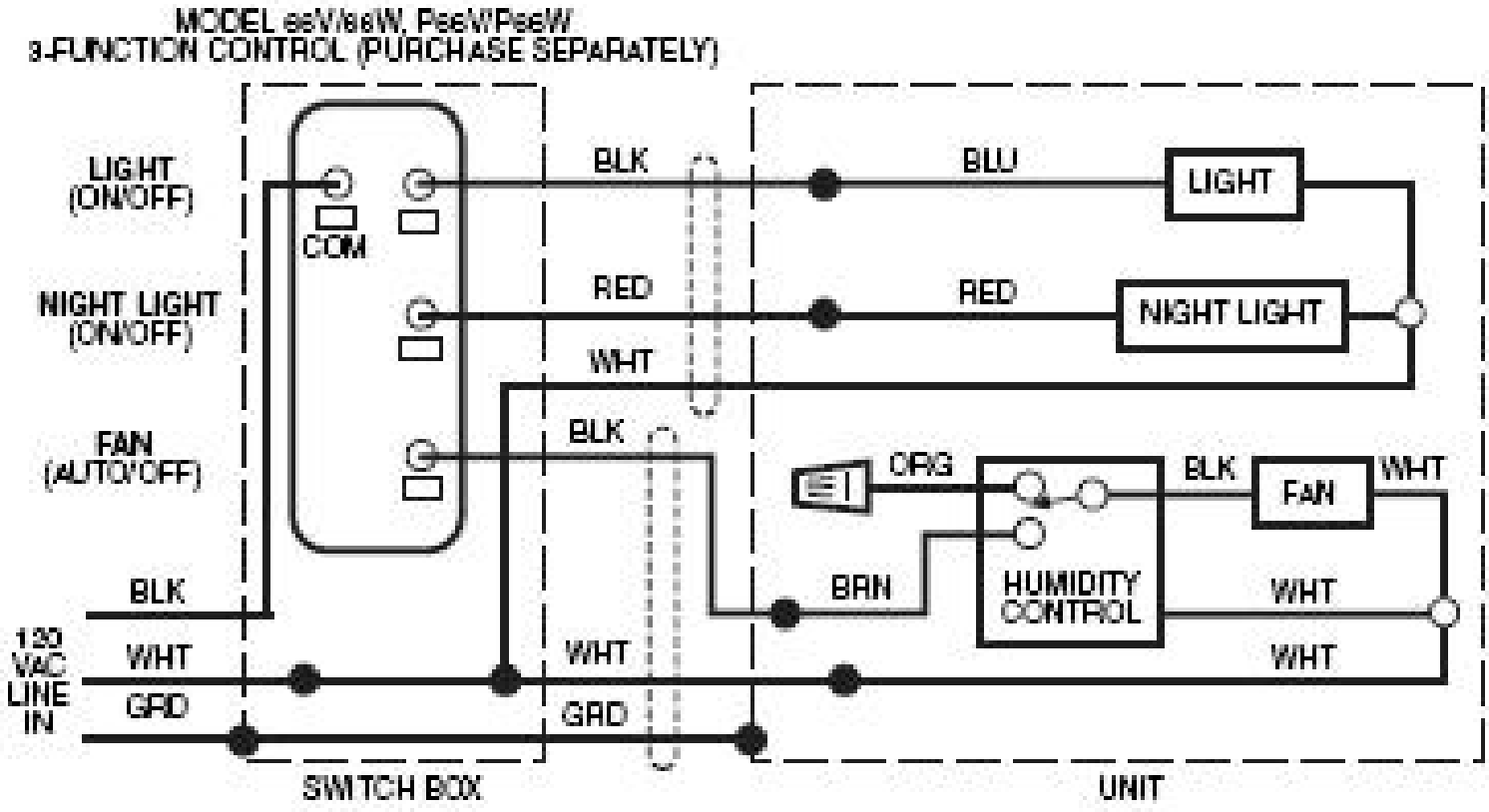
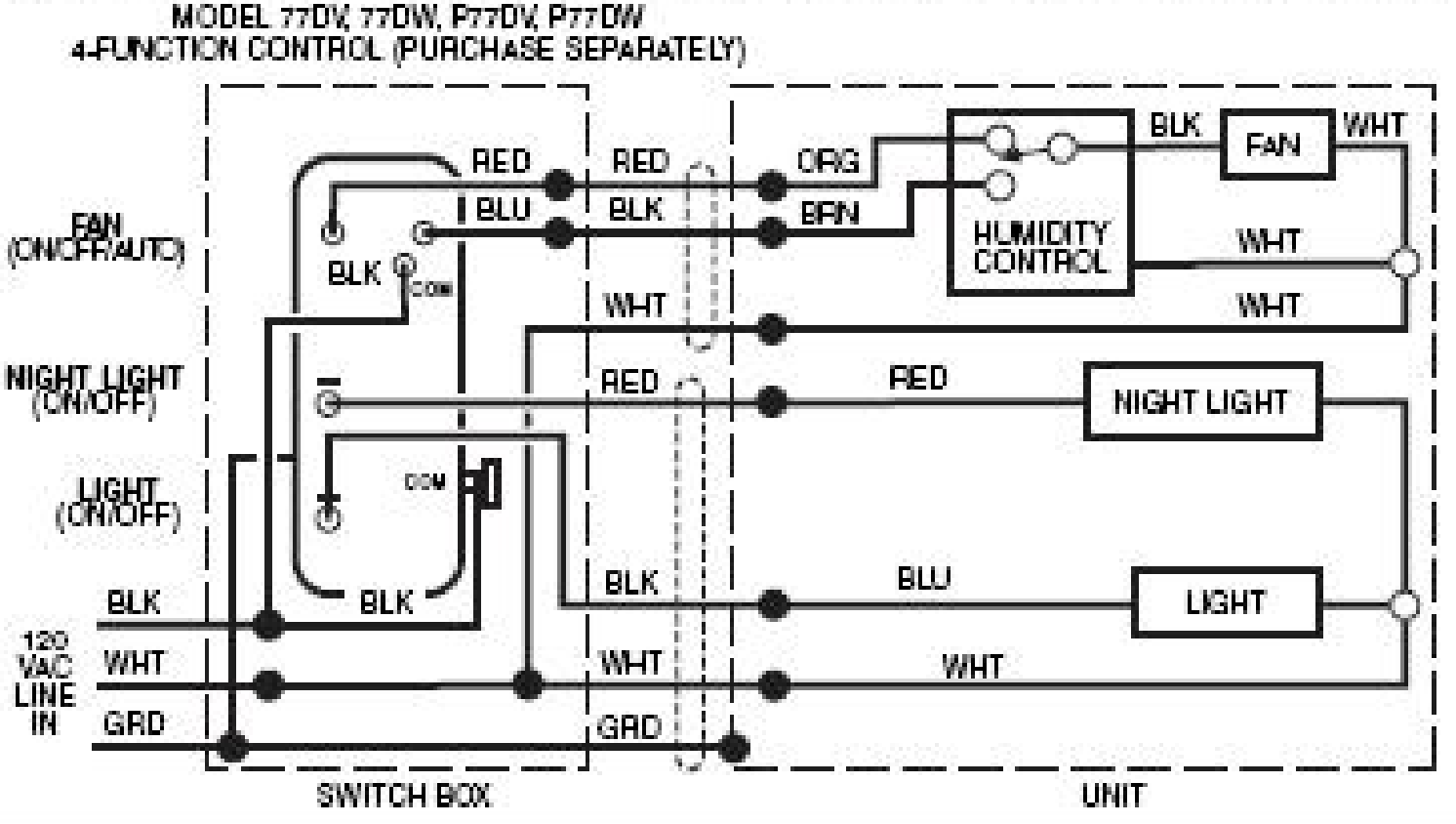
WIRING OPTION #2 - Fan can be turned ON, OFF, or set to operate automatically.